EXPERIMENT-03 Characteristics and parameters of Op-Amp

Aim: To study and measure the characteristics and parameters of an Op-amp (IC-741):

(a) Input bias current at inverting terminal
(b) Input bias current at non-inverting terminal
(c) Input offset current
(d) Input offset voltage
(e) Slew rate

INTRODUCTION:

the op-amp consists of four primary functional blocks:

- **Input Stage:** A dual-input, balanced-output differential amplifier that provides most of the voltage gain and establishes the **input resistance**.
- **Intermediate Stage:** Usually a second differential amplifier (dual-input, unbalanced-output) driven by the first stage.
- **Level Shifting Circuit:** Since direct coupling is used, this stage shifts the DC output level of the intermediate stage **downward to zero volts** relative to ground.
- **Output Stage:** Generally a **push-pull or complementary-symmetry pair** that increases the voltage swing, improves current supply capability, and provides **low output resistance**.

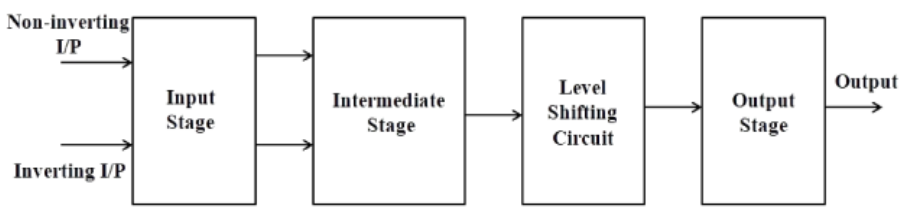

Fig-1: Block diagram of op-amp

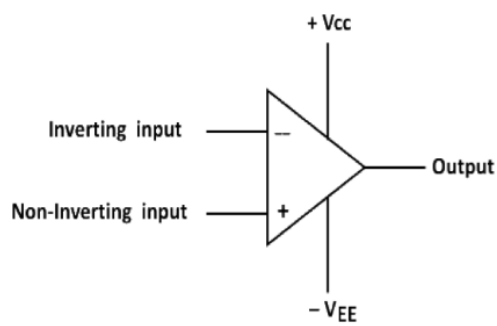

Fig-2: Schematic symbol of op-amp

Ideal Electrical Characteristics

- Infinite Voltage Gain
- Infinite Input Resistance
- Zero Output Resistance

- Infinite Bandwidth: The device should be able to amplify any frequency signal from DC to extremely high frequencies without attenuation.
- Infinite Common-Mode Rejection Ratio (CMRR): The amplifier should perfectly reject signals that are common to both input terminals, only amplifying the difference.
- Zero Offset: The output should be perfectly centered at ground potential when no input is applied, as regulated by the internal level translator.

Op-amp IC-741 pin configuration

The pin configuration of IC-741 general purpose operational amplifier is shown in Fig. 6. The reference point of the chip is the notch at the top. The pins are numbered in a counter clockwise direction, starting at the notch.

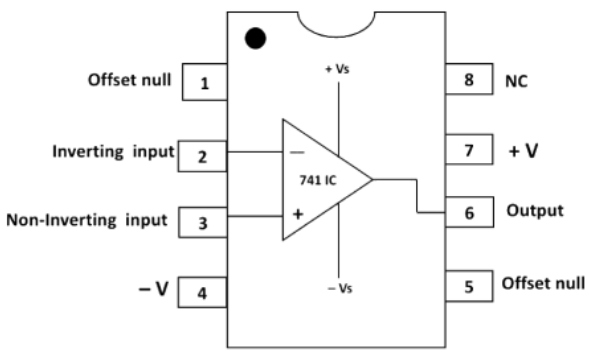

Pin(s)	Function	Description
1 & 5	**Offset Null**	Connected to a potentiometer to calibrate the output to exactly zero wl no input is present.
2	**Inverting I/P**	Signal applied here results in an output of **opposite polarity**.
3	**Non-Inverting I/P**	Signal applied here results in an output of the **same polarity**.
4 & 7	**Power Supply**	**Pin 4** is Negative (V_{EE}/Ground); **Pin 7** is Positive (V_{CC}).
6	**Output**	The terminal where the amplified signal is delivered.
8	**NC**	No Connection; this pin is not used.

Input offset voltage

Input offset voltage is the voltage that must be applied between the two input terminals of an op-amp to null the output. We denote input offset voltage by V_{io}. This voltage V_{io} could be positive or negative. For a 741C, the maximum value of V_{io} is 6mV dc. The smaller the value of V_{io}, the better the input terminals are matched.

S. No.	Source	Target
1	IC741_ pin 07	Supply VCC
2	Multimeter_GND	Supply GND
3	IC741_ pin 04	Supply VEE
4	Resistance (R_f)_terminal A1	IC741_ pin 02
5	Resistance (R_f)_terminal C1	IC741_ pin 06
6	Capacitance (C_1) _terminal A1	IC741_ pin 02
7	Capacitance (C_1) _terminal C1	IC741_ pin 06
8	Resistance (R_2) _terminal A1	IC741_ pin 03
9	Resistance (R_2) _terminal C1	Supply GND
10	Resistance (R_1) _terminal A1	IC741_ pin 02
11	Resistance (R_1) _terminal C1	Supply GND
12	Multimeter VCC	IC741 pin 06

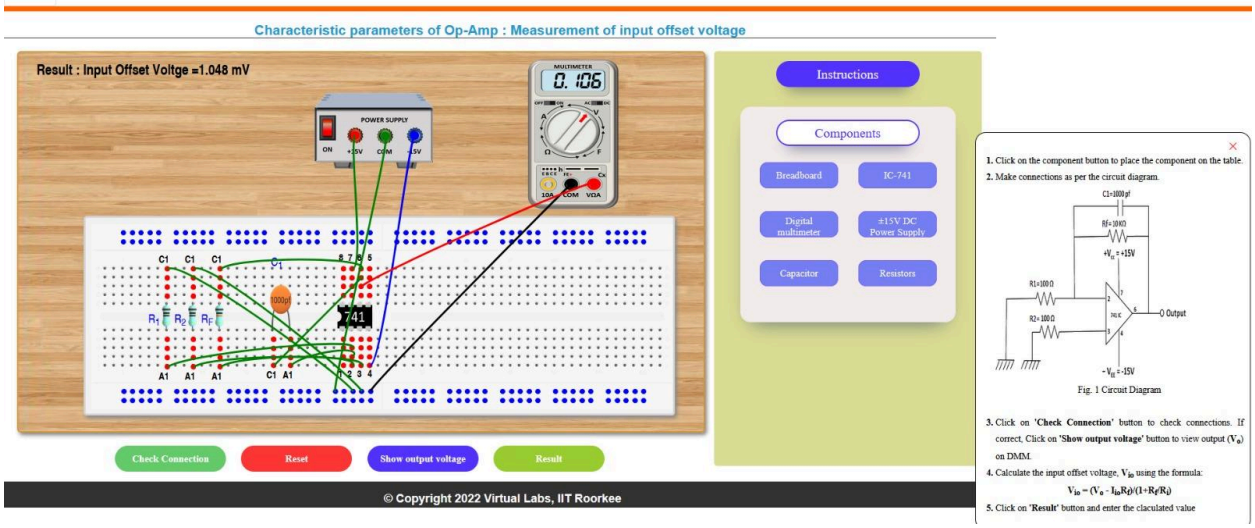

Input offset current I_{io}

The algebraic difference between the currents into the inverting and non-inverting terminals is known as input offset current Iio. The formula for calculating it is **Iio = Vo/Rf.**

S. No.	Source	Target
1	IC741_ pin 07	Supply VCC
2	Multimeter_GND	Supply GND
3	IC741_ pin 04	Supply VEE
4	Resistance (R_f)_terminal A1	IC741_ pin 02
5	Resistance (R_f)_terminal C1	IC741_ pin 06
6	Capacitance (C_1) _terminal A1	IC741_ pin 02
7	Capacitance (C_1) _terminal C1	IC741_ pin 06
8	Resistance (R_1) _ terminal A1	IC741_ pin 03
9	Resistance (R_1) _ terminal C1	Supply GND
10	Capacitance (C_2) _terminal A1	IC741_ pin 03
11	Capacitance (C_2) _terminal C1	Supply GND
12	Multimeter_VCC	IC741_ pin 06

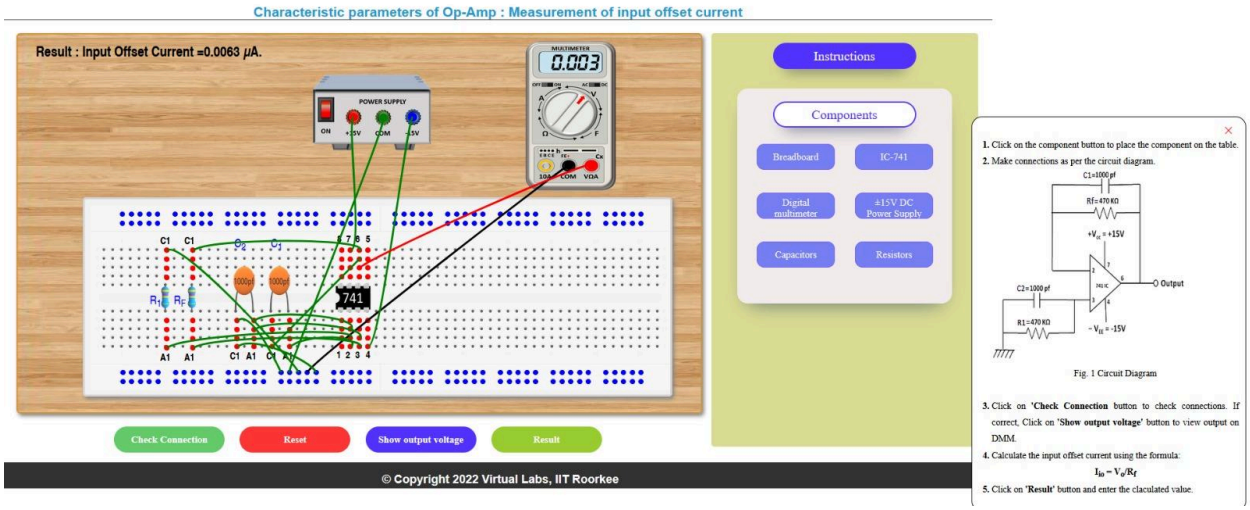

Inverting bias current.

S. No.	Source	Target
1	IC741_ pin 07	Supply VCC
2	IC741_ pin 03	Supply GND
3	Multimeter _GND	Supply GND
4	IC741_ pin 04	Supply VEE
5	IC741 _ pin 02	Resistance (R_f) _ terminal C1
6	IC741_ pin 06	Resistance (R_f) _ terminal A1
7	IC741_ pin 02	Capacitance (C_1) _ terminal C1
8	IC741_ pin 06	Capacitance (C_1) _ terminal A1
9	Multimeter_VCC	IC741_ pin 06

Formula used to calculate it is **IB1 = Vo/Rf**

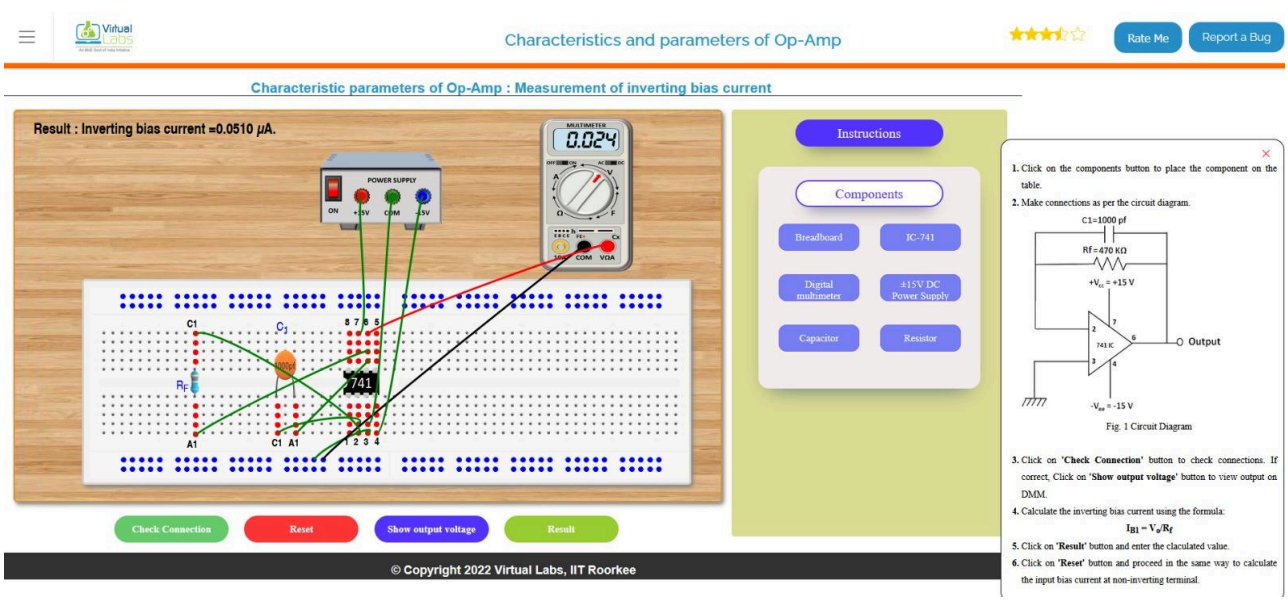

SLEW RATE

Slew Rate (SR) is defined as the maximum rate of change of output voltage and is expressed in volts per micro-seconds

SR= $(dV_o /dt)_{max}$ V/μs,

Slew rate indicates how rapidly the output of an op-amp can change in response to changes in the input frequency. One of the drawbacks of the 741C is its low slew rate (0.5V/μs), which limits its use in relatively high frequency applications, especially in oscillators, comparators and filters.

S. No	Source	Target
1	IC741_ pin 07	Supply VCC
2	IC741_ pin 04	Supply VEE
3	Generator_terminal C	Supply GND
4	Resistance (R_1) _terminal A1	IC741_ pin 06
5	Resistance (R_1) _terminal C1	Supply GND
6	IC741_ pin 06	IC741_ pin 02
7	Generator_ terminal A	IC741_ pin 03
8	CRO_ terminal C	IC741_ pin 06
9	Generator_terminal A	CRO_terminal A

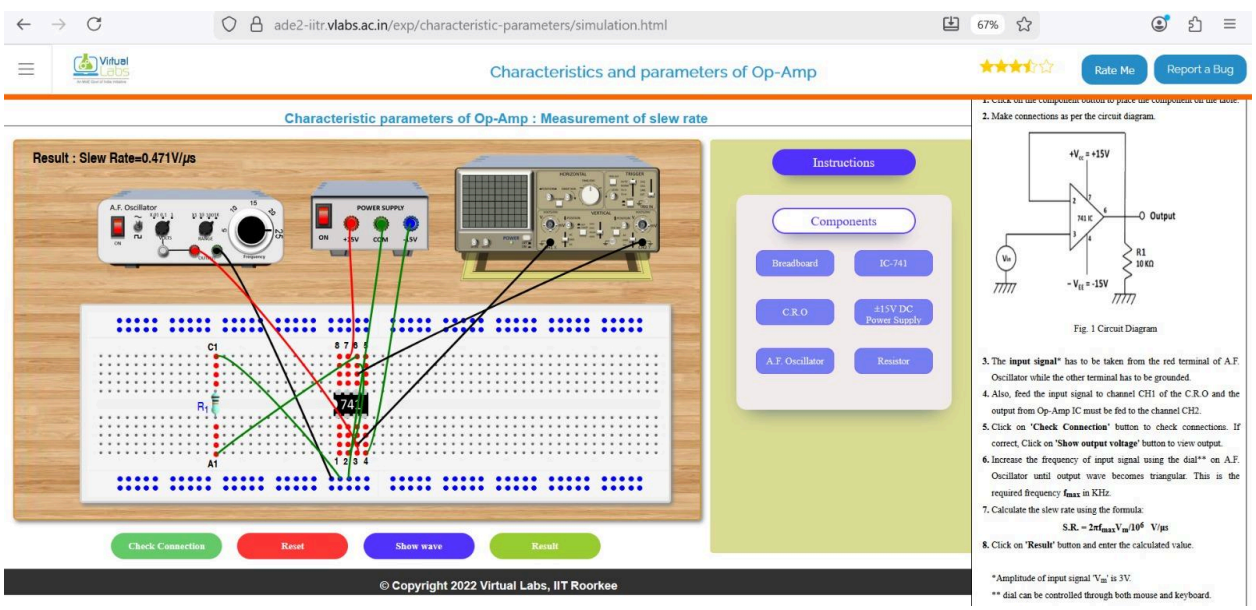

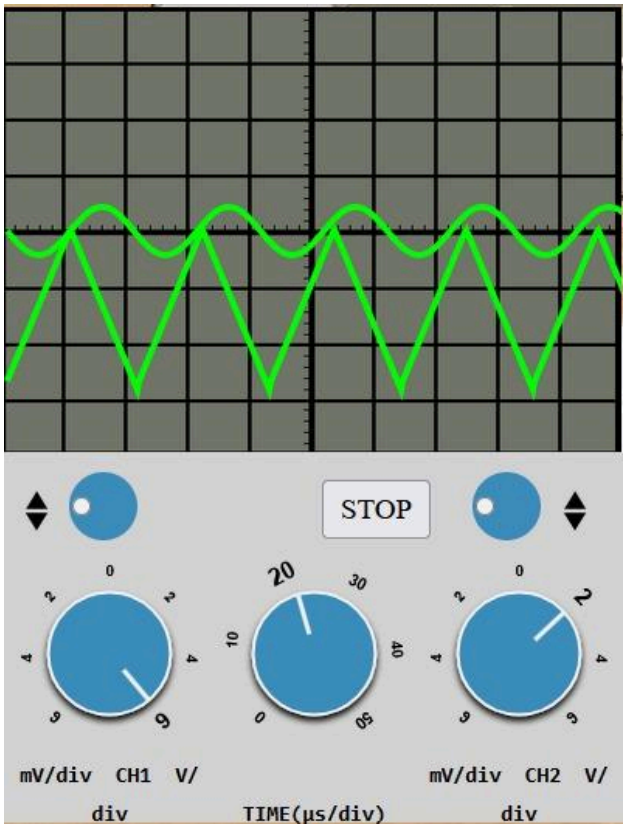

OBSERVATION

1. Input Offset Voltage (Vio)

- **Measurement:** The simulation recorded a Vio of **1.048 mV**.
- **Observation:** This value is well within the typical range for a standard 741 IC (usually rated up to 5-6 mV). It represents the voltage mismatch between the internal differential input transistors; even with zero input, this small voltage is amplified, requiring the **Offset Null** (Pins 1 & 5) calibration mentioned in your notes to reach a true 0V output.

2. Bias and Offset Currents (I_{B} & I_{io})

- **Inverting Bias Current (IB1):** Observed at **0.0510 µA** (51 nA).
- **Input Offset Current (Iio:** Observed at **0.0063 µA** (6.3 nA).
- **Observation:** The Offset Current is significantly lower (approx. 12%) than the Bias Current.
- **Significance:** This indicates that the two input transistors are **closely matched**, as the offset current is the difference between the two input branch currents I{io} = |I_{B1} - I_{B2}|). Smaller offset currents result in less DC error when using high-value resistors.

3. Slew Rate (Dynamic Response)

- **Measurement:** Calculated at **0.471 V/µs**.
- **Waveform Analysis:** The oscilloscope shows the output signal (green) changing from a sine wave into a **triangular shape**.
- **Observation:** This "triangularization" occurs because the input frequency is too high for the op-amp's internal circuitry to track the slope of the sine wave.
- **Conclusion:** The 741 is a relatively "slow" op-amp; its output cannot change faster than roughly 0.5 volts every microsecond, limiting its use in high-frequency applications.